A Visit to the Louisiana Supreme Court Color and Activity Book

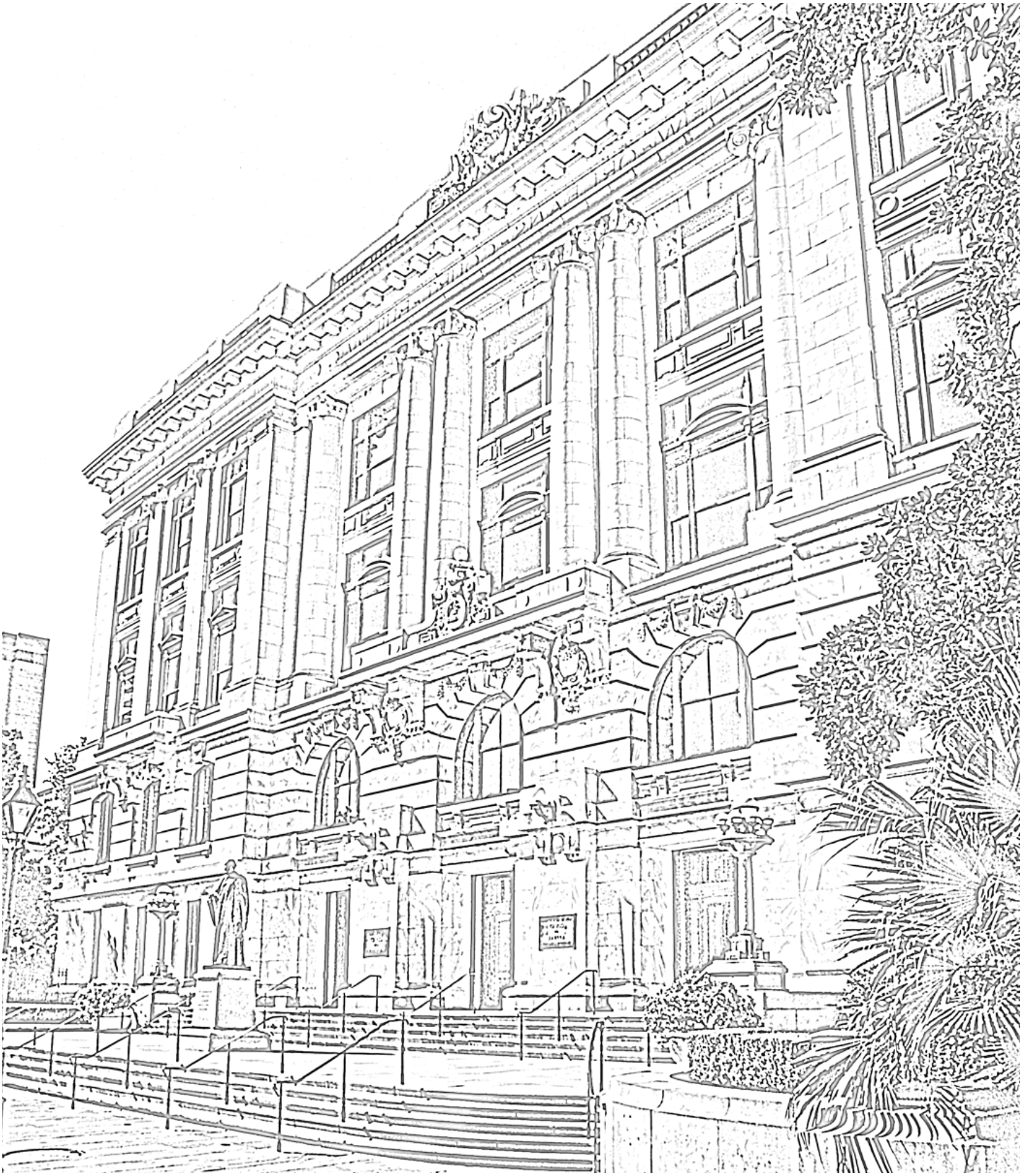

Supreme Court Hidden Message

Can you break the code to discover the hidden message? Fill in the letters using the numbers to break the code.

19	4	10	3	13	11	4

17	13

17	6	4

10	13	18	7	16	7	1	12	1

16	18	14	15	4	11	4

3	13	18	15	17

7

6	13	14	4

20	13	18

4	12	8	13	20

20	13	18	15

17	13	18	15

3	6	7	4	5

8	18	16	17	7	3	4

8	13	6	12	16	13	12

Hidden Word Key:

1 = A
2 = B
3 = C
4 = E
5 = F
6 = H
7 = I
8 = J
9 = K
10 = L
11 = M
12 = N
13 = O
14 = P
15 = R
16 = S
17 = T
18 = U
19 = W
20 = Y

Law Day

May 1

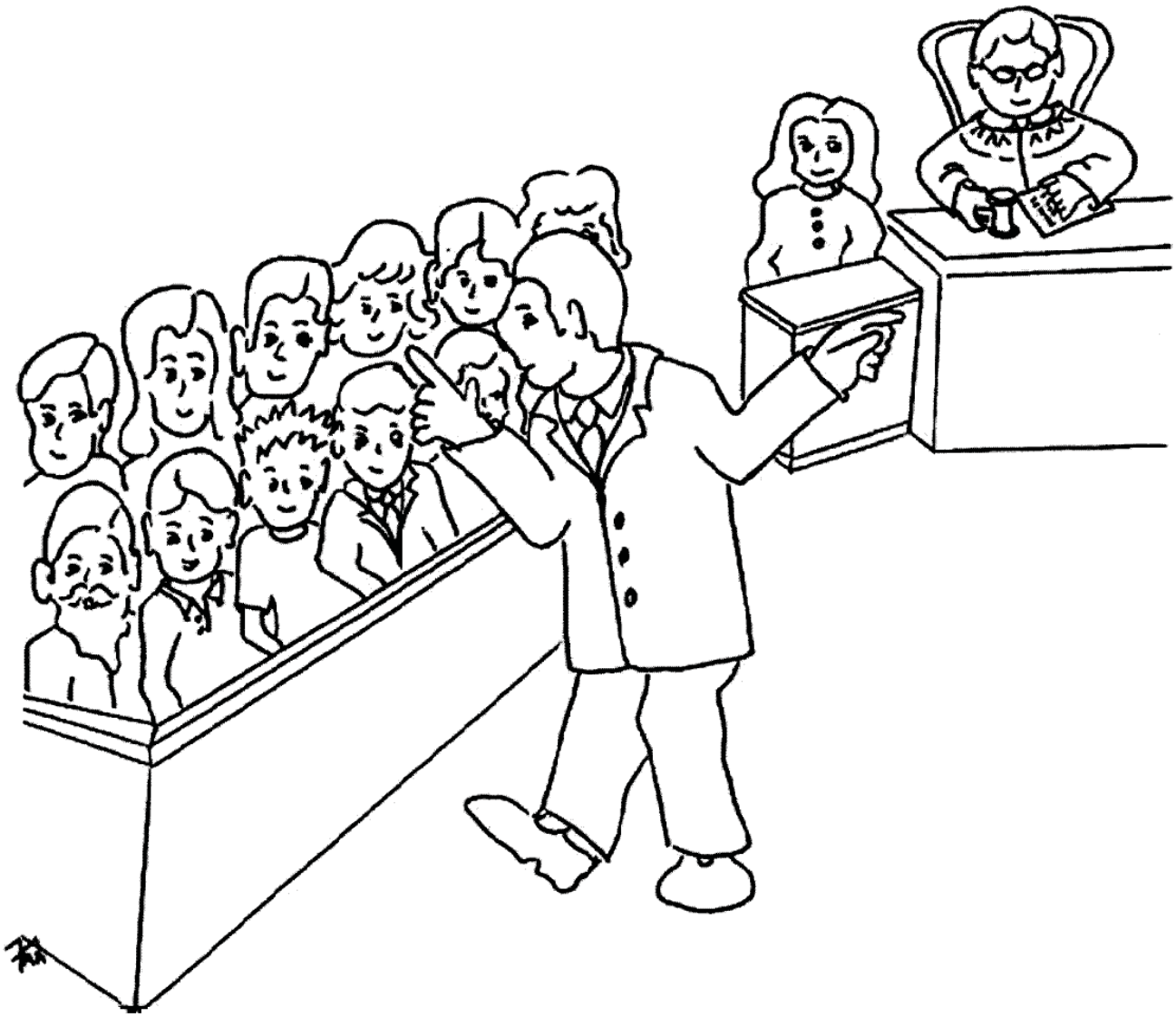

A Salute to the American Jury

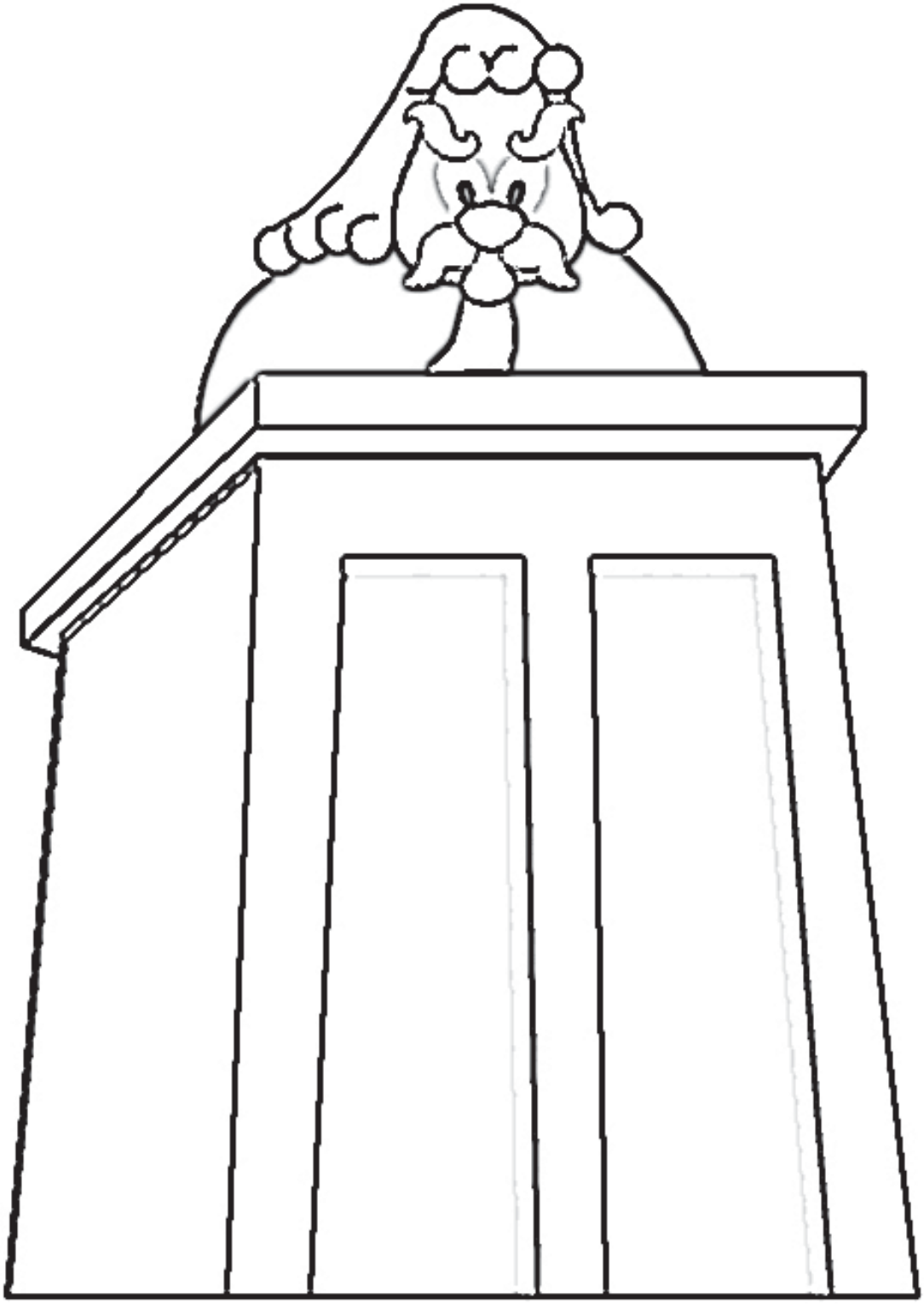

The Judge

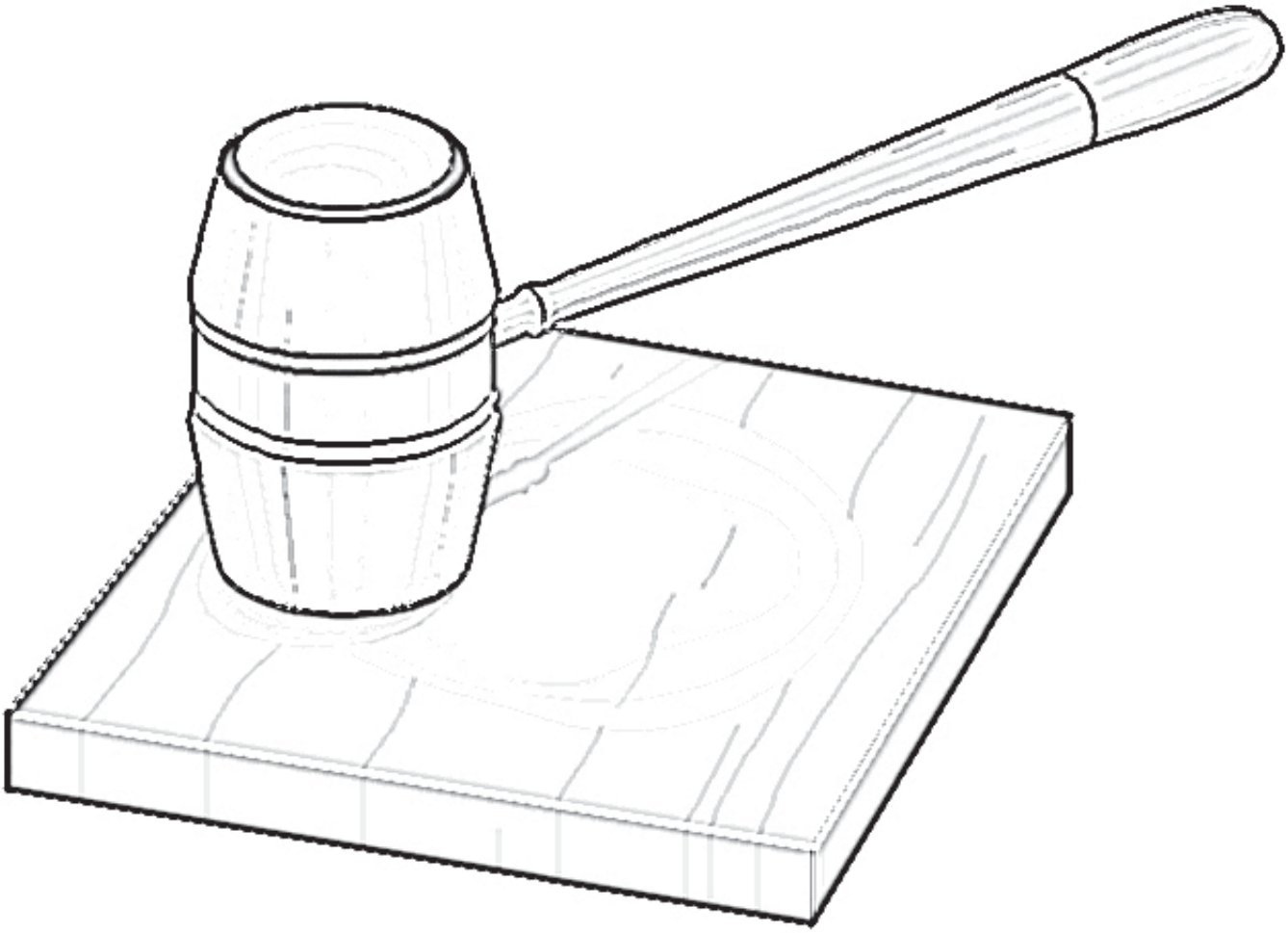

Order in the Court

Louisiana State Flag

Louisiana Supreme Court Seal

Lady Justice

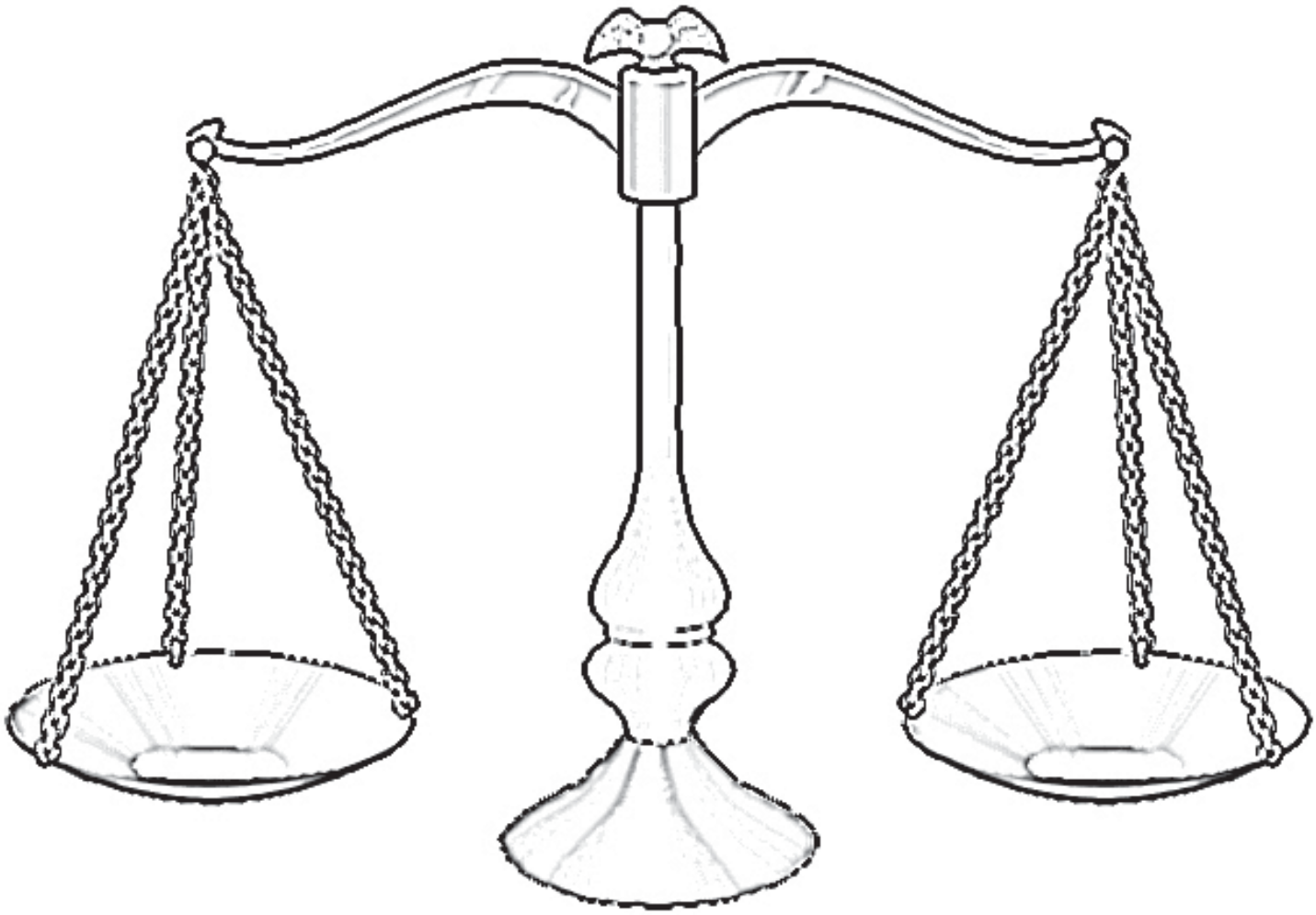

Scales of Justice

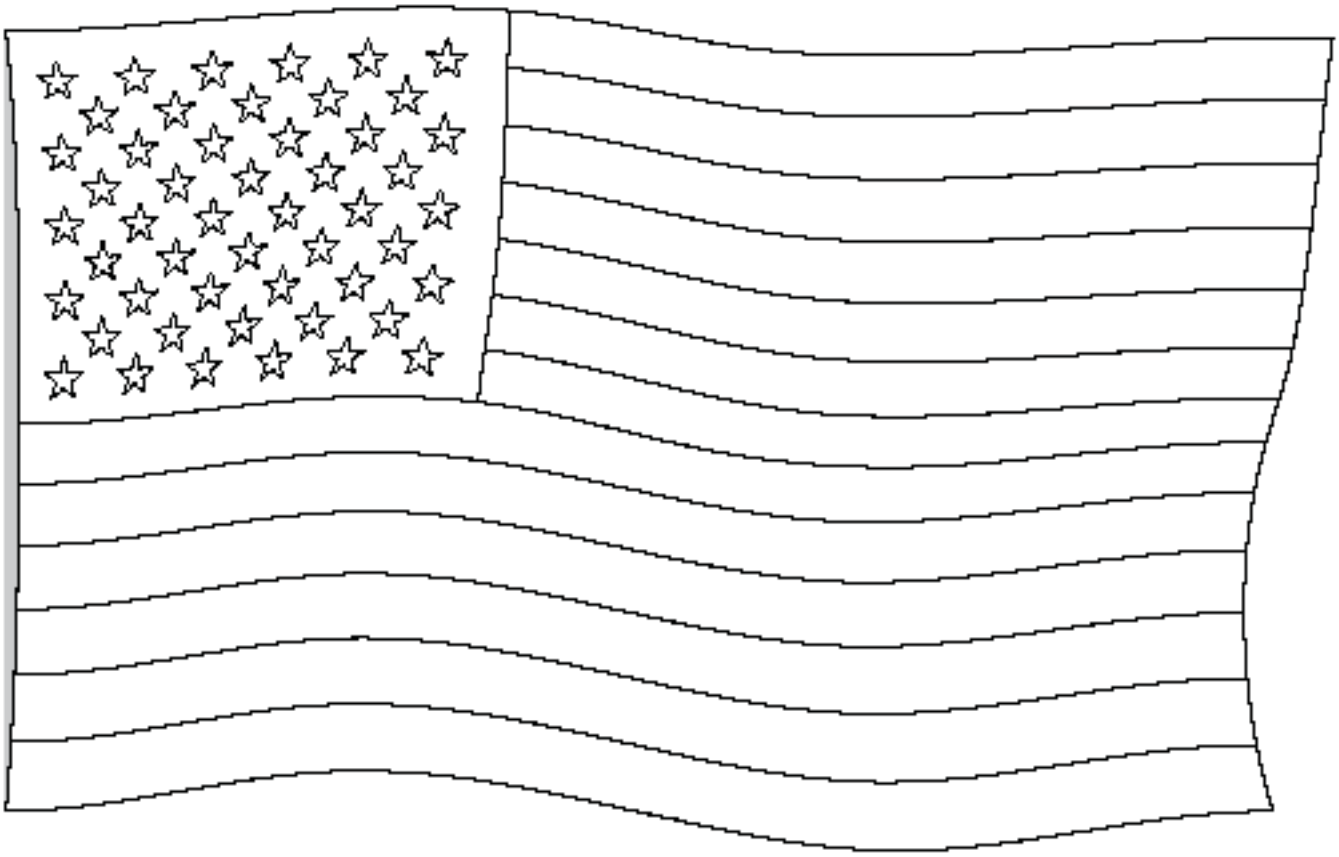

Old Glory

Magnolia

Adopted as Louisiana's State Flower August 1, 1900

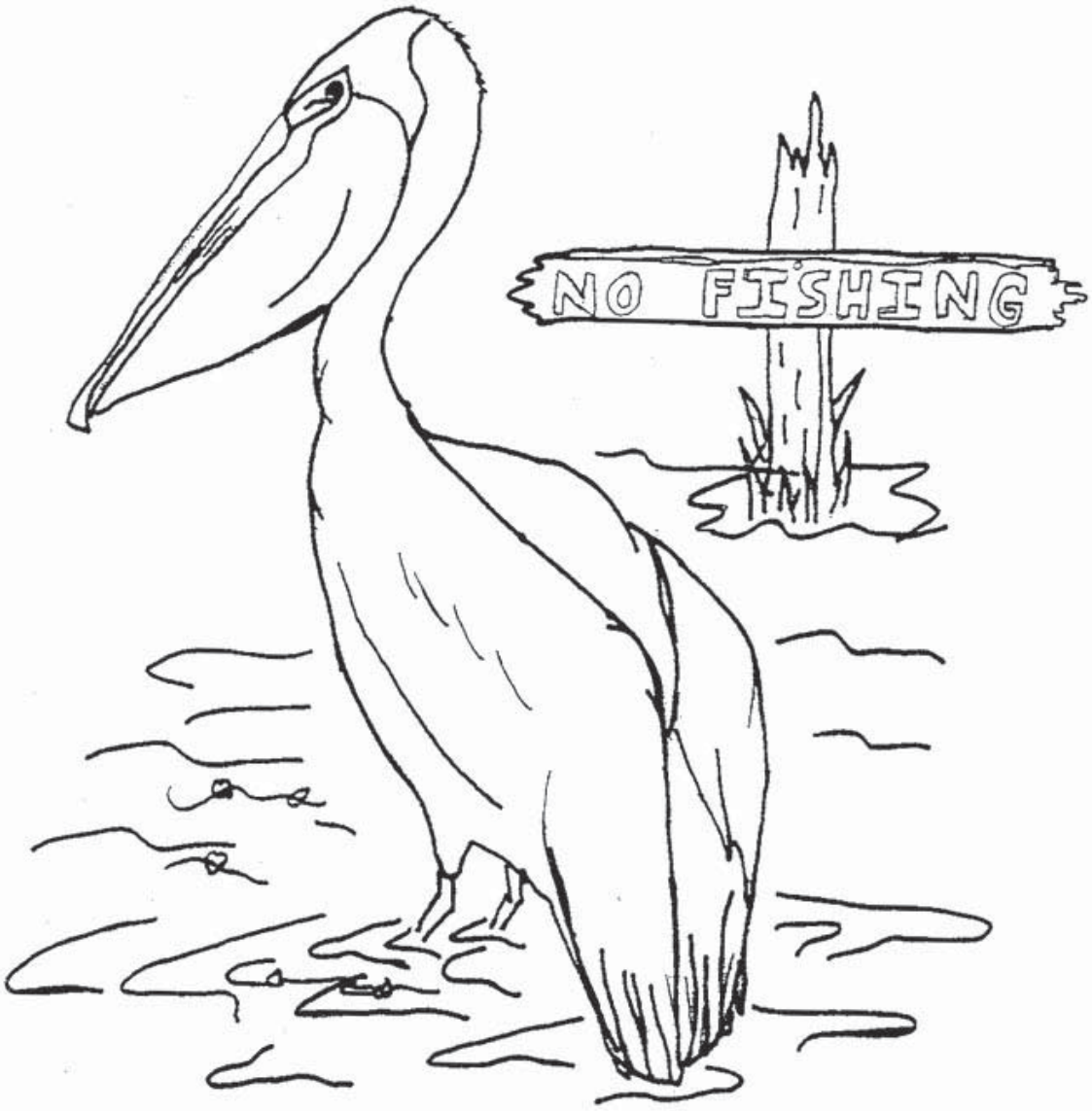

Brown Pelican

Adopted as Louisiana's State Bird July 27, 1966

Edward Douglass White

Statue in front of The Louisiana Supreme Court Building.
The only Louisiana Supreme Court Justice to become a U.S. Supreme Court Justice and eventually the 9th Chief Justice of the U.S. Supreme Court.

Court Words Alphabetical Activity

Put the following words in alphabetical order:

Order	Bench	Elected
Bailiff	Case	Judge
Bill of rights	Johnson	White
Gavel	Oath	Baton Rouge
Jury	Washington	Royal
Louisiana Supreme Court	Fasces	
Seven	Justice	

1. _____
2. _____
3. _____
4. _____
5. _____
6. _____
7. _____
8. _____
9. _____
10. _____
11. _____
12. _____
13. _____
14. _____
15. _____
16. _____
17. _____
18. _____
19. _____

Court WordS Alphabetical Activity Answers

1. Bailiff
2. Baton Rouge
3. Bench
4. Bill of Rights
5. Case
6. Elected
7. Fasces
8. Gavel
9. Johnson
10. Judge
11. Jury
12. Justice
13. Louisiana Supreme Court
14. Oath
15. Order
16. Royal
17. Seven
18. Washington
19. White

Court Word Scramble

Using words from the Alphabetical Activity, unscramble the words below by changing the letters around.

☐☐☐☐☐	RROED
☐☐☐☐☐☐☐	ILFIBFA
☐☐☐☐☐	VALEG
☐☐☐☐	UYJR
☐☐☐☐☐	VENES
☐☐☐☐☐	BECNH
☐☐☐☐	ASEC
☐☐☐☐☐☐☐	NSOJHNO
☐☐☐☐	HOTA
☐☐☐☐☐☐☐☐☐☐	SWOHNGINTA
☐☐☐☐☐☐	SFCSAE
☐☐☐☐☐☐☐	JCIUSTE
☐☐☐☐☐☐☐	DEEETLC
☐☐☐☐☐	GJEUD
☐☐☐☐☐	HWTEI
☐☐☐☐☐	YLOAR

Court Word Scramble Answers

O	R	D	E	R

B	A	I	L	I	F	F

G	A	V	E	L

J	U	R	Y

S	E	V	E	N

B	E	N	C	H

C	A	S	E

J	O	H	N	S	O	N

O	A	T	H

W	A	S	H	I	N	G	T	O	N

F	A	S	C	E	S

J	U	S	T	I	C	E

E	L	E	C	T	E	D

J	U	D	G	E

W	H	I	T	E

R	O	Y	A	L

CONNECT-THE-DOTS

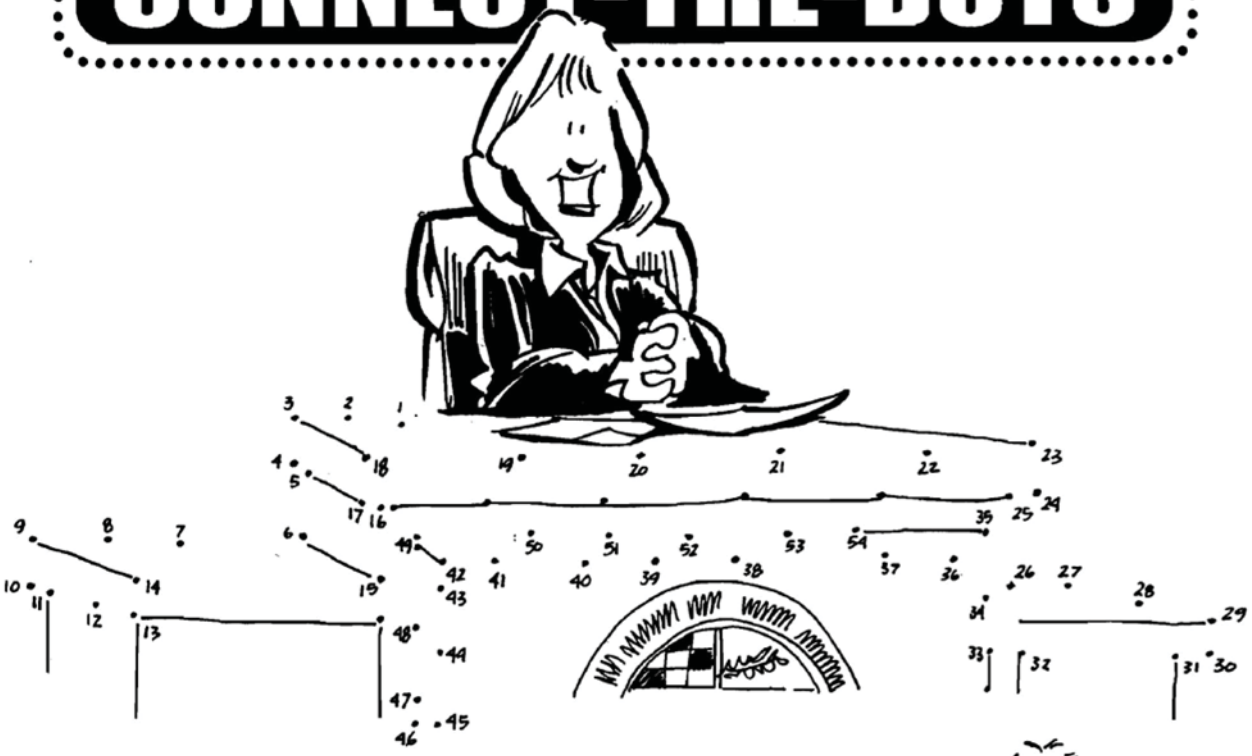

The Judge speaks to the courtroom from an area called the bench. But she can't begin until you CONNECT-THE-DOTS and build the bench for her to sit behind.

JUDGE

A judge makes decisions for families. She wears a special robe. She listens to everyone in the courtroom at a trial. She makes sure everyone follows the rules so that the trial is fair. Then she tries to make a decision that is good for the kids, and fair to the parents.

Developed by the Family Services Program of
the Administrative Office of the Courts - Maryland

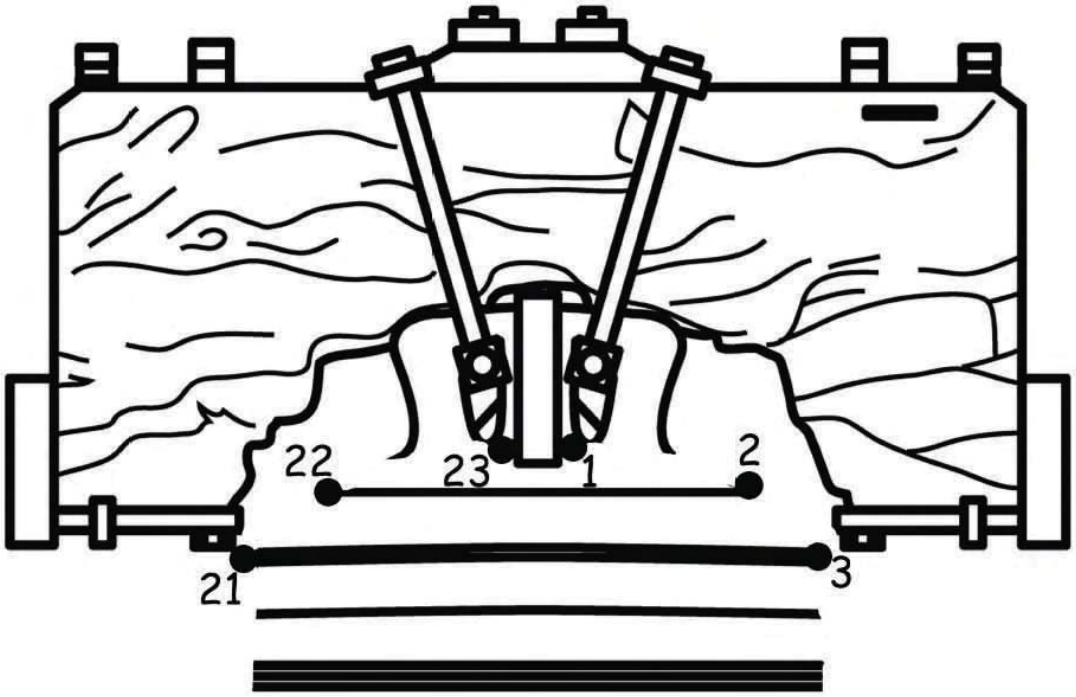

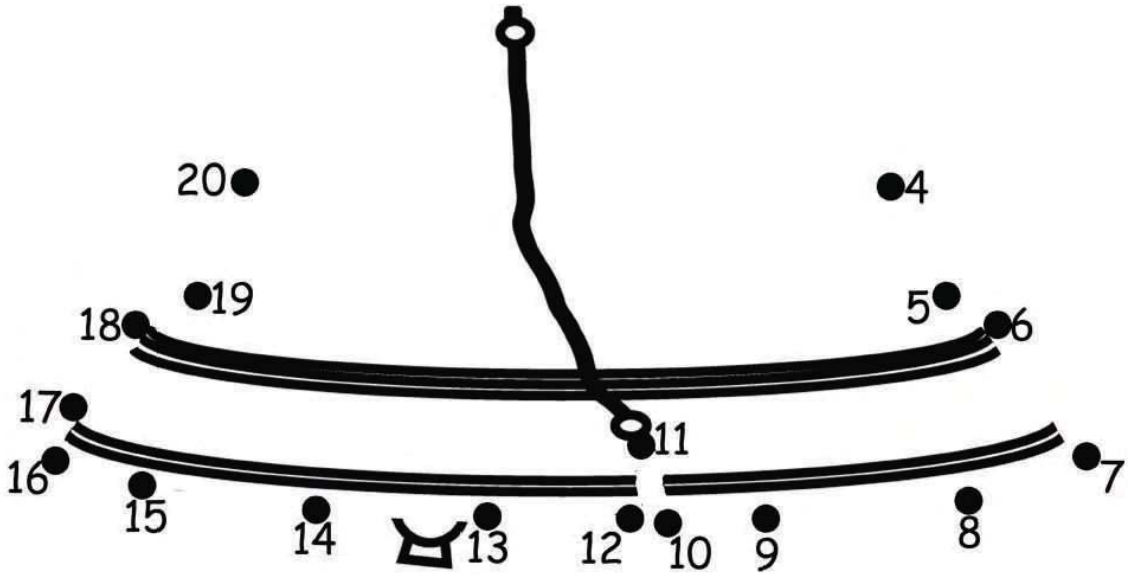

Connect the Dots to display
a symbol for liberty and justice

©2008 abcteach.com

Connect the dots to draw the borders of our state

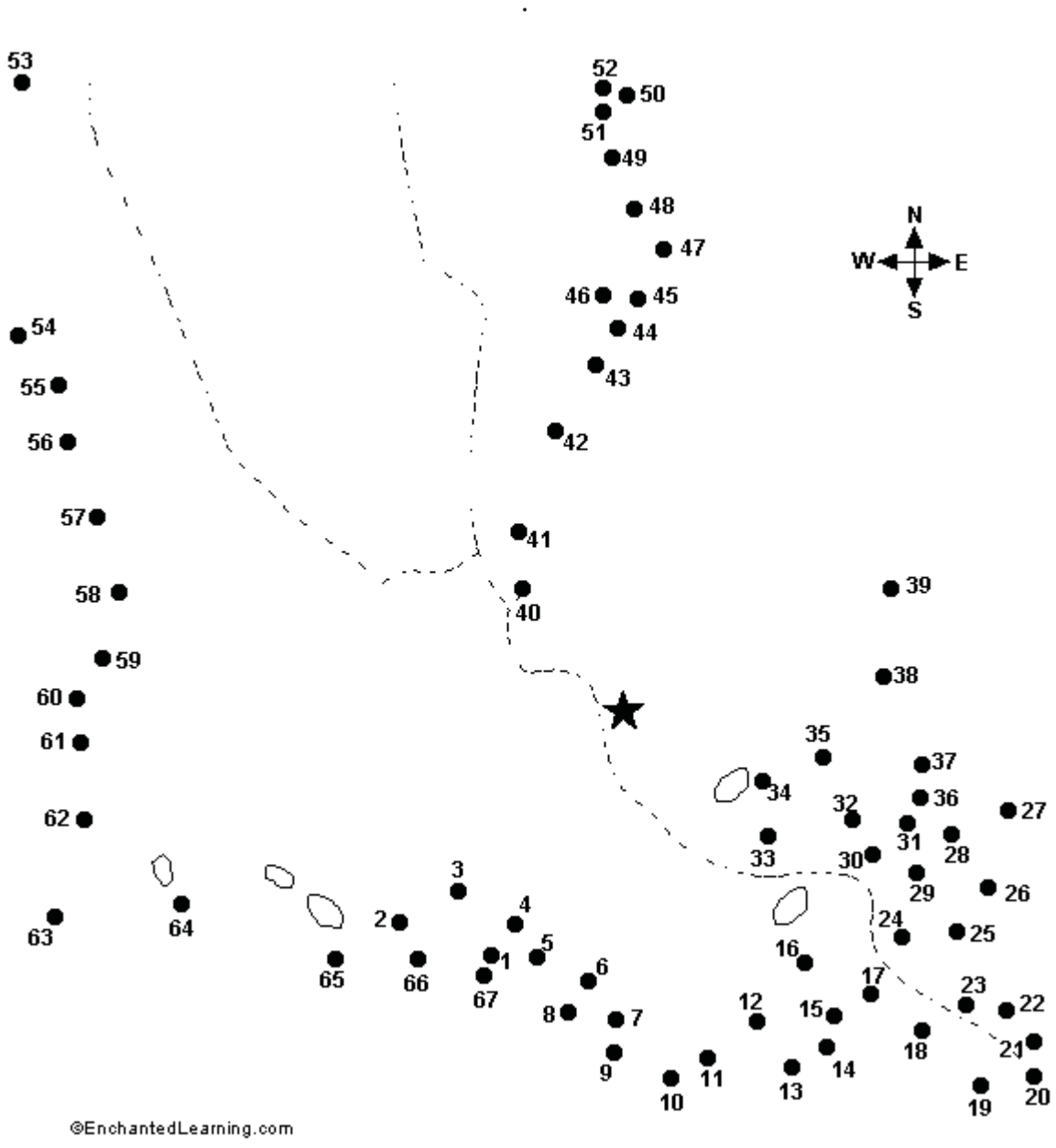

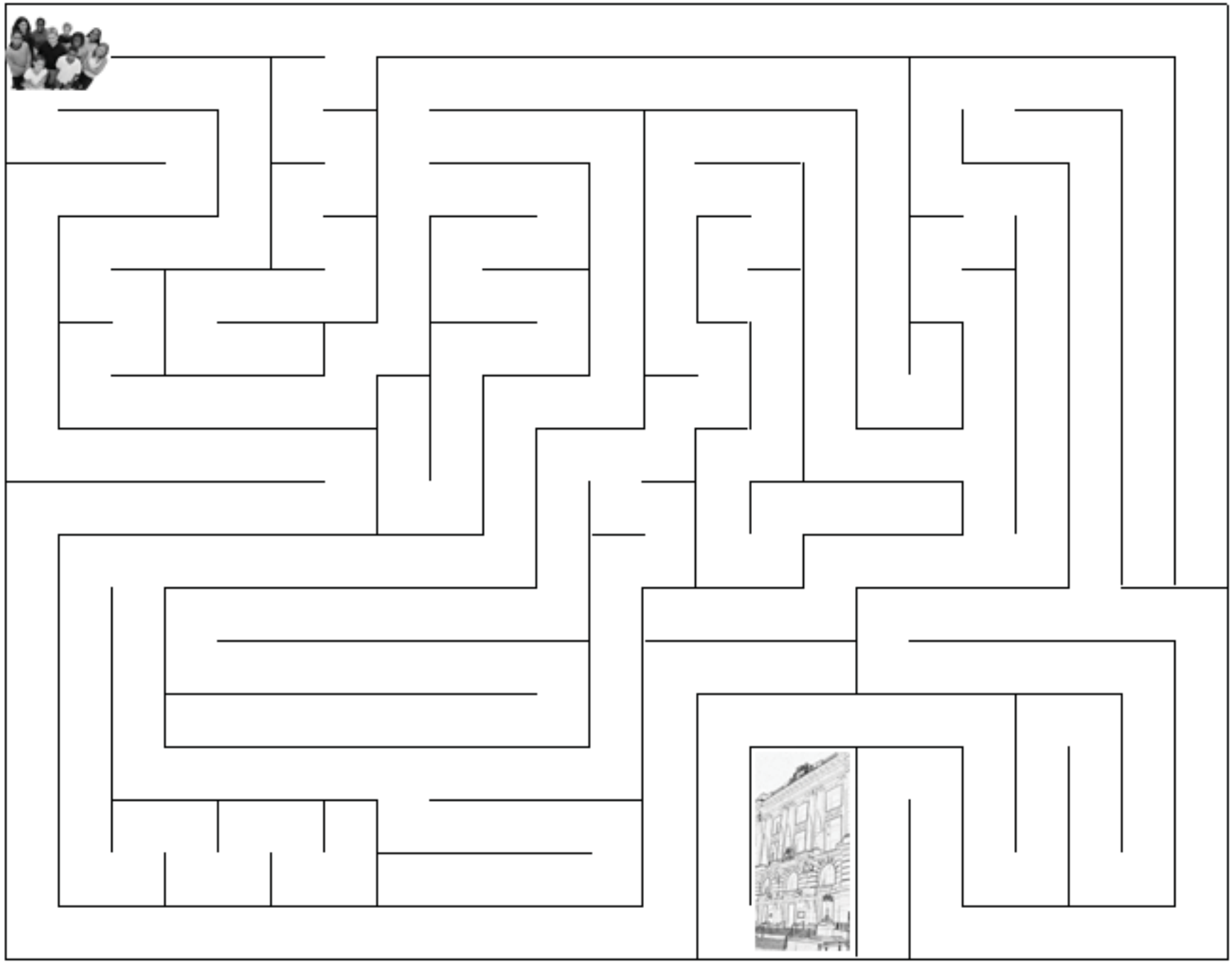

HELP THE STUDENTS FIND THEIR WAY TO THE COURTHOUSE

©1998 The Kid's Domain www.kidsdomain.com
free for non-profit use